THIS DRAWING IS UNPUBLISHED. RELEASED FOR PUBLICATION NOV ,2005.
© COPYRIGHT 2005 BY TYCO ELECTRONICS CORPORATION. ALL RIGHTS RESERVED.

| LOC | DIST |
|---|---|
| E | B |

REVISIONS

| P | LTR | DESCRIPTION | DATE | DWN | APVD |
|---|---|---|---|---|---|
| | C | ECR-05-015880 | 22NOV05 | JMS | FWK |

NOTES:

1. PACK IN ACCORDANCE WITH AMP SPEC 107-3275
2. 100 TRAY PACK IN ACCORDANCE WITH AMP SPEC 107-3275
3. Ag PLATING
4. THIS ITEM MUST BE WHITE
5. HAND TOOL : 9-1478240-0
6. DIE SET : 9-1478242-0
7. ELECTRICAL CHARACTERISTICS

| | |
|---|---|
| FREQUENCY RANGE: | DC - 2 GHz |
| NOMINAL IMPEDANCE: | 75 Ohm |
| INSULATION RESISTANCE: | 5000 MOhm |
| WORKING VOLTAGE: | 500 Volts RMS at Sea Level |
| DIELECTRIC WITHSTAND VOLTAGE: | 1500 Volts RMS Max |
| CONTACT RESISTANCE: | |
| CENTRE CONTACT: | 1.50 mOhm Max |
| OUTER CONTACT: | 0.20 mOhm Max |
| VSWR @ 2GHz: | 1.20:1 Max |
| INSERTION LOSS dB @ x 2 GHz: | 0.20 Max |

8. MECHANICAL CHARACTERISTICS

| | |
|---|---|
| COUPLING RETENTION FORCE: | 445N Min |
| CABLE RETENTION FORCE: | 170N Min |
| DURABILITY: | 500 Cycles Min |

9. ENVIRONMENTAL CHARACTERISTICS

| | |
|---|---|
| OPERATING TEMPERATURE: | -65 to +165 DegC |

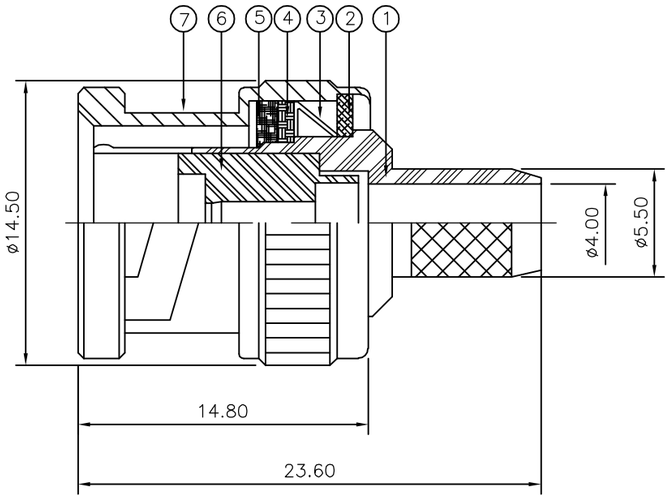


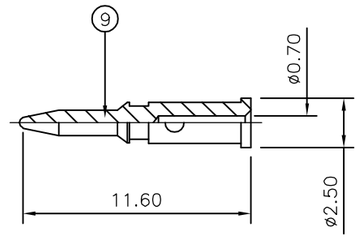


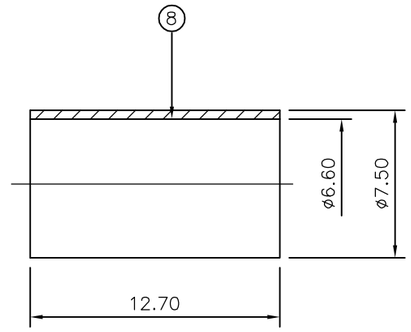


RECOMMENDED CENTRE CONTACT A/F HEX

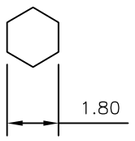


RECOMMENDED CRIMP SLEEVE A/F HEX

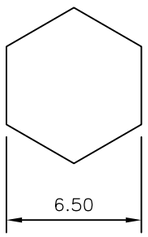


RECOMMENDED CABLE STRIPPING DIM'S

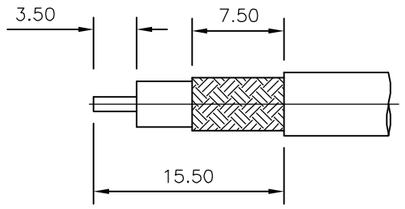


| QUANTITY PER ASSY | | | | MATERIAL | DESCRIPTION | ITEM |
|---|---|---|---|---|---|---|
| | | 1 | 1 | BRASS (3) | CONTACT | 9 |
| | | 1 | 1 | BRASS (3) | FERRULE | 8 |
| | | 1 | 1 | BRASS (3) | SHELL | 7 |
| | | 1 | 1 | PTFE | INSULATION | 6 |
| | | 1 | 1 | SILICON RUBBER (4) | GASKET | 5 |
| | | 1 | 1 | BRASS (3) | WASHER | 4 |
| | | 1 | 1 | SPRING STEEL | SPRING | 3 |
| | | 1 | 1 | BRASS (3) | WASHER | 2 |
| | | 1 | 1 | BRASS (3) | BODY | 1 |
| | | 6--0 | 1--0 | | | |
| | | (2) | (1) | | | |

PARTS LIST

THIS DRAWING IS A CONTROLLED DOCUMENT.

DIMENSIONS: mm

TOLERANCES UNLESS OTHERWISE SPECIFIED:
0 PLC ± -
1 PLC ± -
2 PLC ± -
3 PLC ± -
4 PLC ± -
ANGLES ± -

MATERIAL: SEE TABLE

FINISH: -

| | | |
|---|---|---|
| DWN | J.SANDWELL | 22NOV05 |
| CHK | S.PARLOW | 22NOV05 |
| APVD | F.WHEELER-KING | 22NOV05 |
| PRODUCT SPEC | 108-3435 | |
| APPLICATION SPEC | 411-3247 | |
| WEIGHT | - | |

CUSTOMER DRAWING

tyco Electronics

Tyco Electronics Corporation
Bideford EX39 4HE

NAME: BNC STRAIGHT PLUG CRIMP 75 OHM RG59B/U, 62A/U, 140/U, 210/U, URM90, KX6A, KX25, KX52, KX53

| SIZE | CAGE CODE | DRAWING NO | RESTRICTED TO |
|---|---|---|---|
| A3 | 00779 | C-1337429 | - |

SCALE NTS | SHEET 1 OF 1 | REV C